SPECIFICATIONS

EF80SG

EXHAUST FAN

80 CFM/<0.3 Sones @ 0.10" SP.
82 CFM @ 0.25 SP. (Boost)

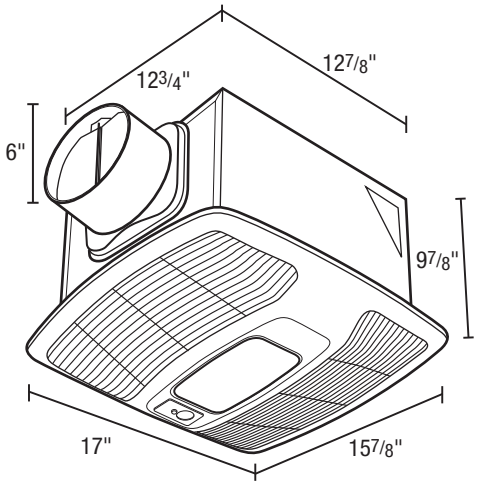

- **Grill**
  White, polymeric grill secured in place with torsion springs; easily removed if necessary, dimensions - 17" x 15 7/8".
- **Blower Wheel**
  Balanced polymeric dual inlet blower wheel secured in place using a hex nut.
- **Motor**
  Enclosed 4 pole high efficiency, permanently split capacitor motor (PSC); life time lubrication, suitable for continuous operation. Rated 115/120 volts, 60 Hz.
- **Fan Housing**
  23 gauge galvanized steel housing. Fan housing dimensions: 12 7/8"x 12 3/4"x 9 7/8".
- **Motion Sensor**
  Integrated motion sensor automatically turns fan on when room is occupied. Adjustable off delay from 30 seconds to 80 minutes.
- **Duct Collar**
  6" round, zinc plated metal collar adapter. 6" spring loaded and gasketed aluminum backdraft damper.
- **Electrical Connections**
  0.5" electrical knockouts provided. Easy wiring access via either internal or external wiring compartment cover.
- **Lighting**
  Electronic Quick Start Ballast – rated 26 Watt. Includes 26 watt, Quad 4 pin PL lamp. 4 watt night light (night light bulb not included).

Acceptable for use over tub or shower when installed in a GFCI protected branch circuit.

- **Unit Mounting**
  The housing will mount through drywall thickness up to 3/4", with a rough-in opening of 13 1/8" x 13". The housing will mount either between 16" or 24" on center joists, using the 2 supplied housing mounting brackets. The housing mounting brackets can be adapted for overhead mounting (hardware not provided). The unit is provided with an optionally installed ceiling flange to ensure proper building infiltration rates are maintained and that no air leaks occur between the fan housing and ceiling cutout.

EXPANDED PERFORMANCE

	Static Pressure (inches of w.g.)							Sones @ .1 SP	Fan Speed RPM	Maximum Fan Watts	Full Load Amps
	0	0.05	0.1	0.15	0.20	0.25*	0.375				
Air Flow - CFM	101	90	80	70	59	49/82	5	<0.3	843	37.0	0.7

* Boost speed provides 82 CFM @ .25 Static Pressure, 0.6 sones

PROJECT		ARCHITECT	
LOCATION		ENGINEER	
CONTRACTOR		SUBMITTED BY	DATE

FAN NUMBER	MODEL NUMBER	CFM	IN W.G.	RPM	WATTS	AMPS	SONES	QTY	OPTIONAL EQUIPMENT & REMARKS

Air King: 820 Lincoln Avenue
West Chester, Pennsylvania 19380-4466
Tel: (610) 692-7400 • 877-304-3785
Fax: (610) 696-8048